FEMINA

DIGITAL SERIES MAMMOGRAPHY SYSTEMS

FEMINA DIGITAL DBT

FEMINA DIGITAL

FEMINA DIGITAL COMPACT

SINGLE PLATFORM
THREE SYSTEMS

RADIOLOGIA SA
www.radiologia-sa.com

US X-RAY
RÖNTGEN A.Ş.
[AUTHORIZED DISTRIBUTOR]
sale@usx-ray.com

ERGONOMİCS AND USABİLİTY:

Two color touchscreen displays positioned on both sides of the C-arm, providing real-time visualization of the following parameters:

· Compression force
· Compressed breast thickness
· Collimation format
· Magnification factor
· Projection angle
· Patient name
· Resolution 640 × 480 mm

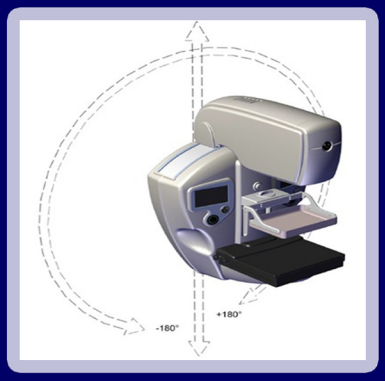

--Rotation movement: Manual, optional motorized
-Vertical movement: Motorize

FEMINA DIGITAL DBT

A top-of-the-line system configurable for all types of mammography examinations, including tomosynthesis. It can be easily upgraded with the latest biopsy techniques for tomosynthesis and contrast-enhanced mammography.

FEMINA DIGITAL

A complete system for 2D image acquisition, fully upgradeable to any digital modality, including 3D and dual-energy capabilities. It is compatible with a wide range of accessories, including systems for stereotactic and tomosynthesis-guided biopsy procedures.

FEMINA DIGITAL COMPACT

This version is suitable for 2D image acquisition; however, it can be integrated with a wide range of accessories offering unique performance and cost advantages. It features a compact design, and its CsI detector provides an excellent fit for mobile mammography screening units.

The new Femina Digital platform has been designed to meet all diagnostic requirements through various configurations, enabling radiologists to utilize the latest digital mammography imaging technologies. The specially designed isocentric C-arm enhances system efficiency and provides superior diagnostic performance.

FEMINA DIGITAL is built on a dedicated platform that integrates all essential tools required to optimize screening and diagnostic workflows. Its functional and ergonomic design enables more comfortable patient positioning, complemented by a fast and user-friendly operating system that streamlines the examination process and minimizes patient discomfort associated with such procedures. In addition, the wide range of available accessories enhances operational flexibility, ensuring a more dynamic and efficient workflow.

ISOCENTRIC C-ARM:
Breast positioning projections and height adjustments can be performed without repositioning the patient.

"SMART µPRESS" COMPRESSION SYSTEM:
Ensures optimal breast compression with minimal patient discomfort. The exclusive "FTSE" function automatically adjusts the applied compression force according to breast density.

SENSROI" AUTOMATIC EXPOSURE CONTROL:
Dual operating mode that automatically adjusts exposure parameters according to breast density (PRE) or breast thic (FAST).

ENHANCED WORKFLOW:
Optional remote image acquisition workstation with Anti-X protective barrier, featuring a 15" color touchscreen display and a 24" TFT LCD color monitor for image visualization.

7" TOUCHSCREEN COLOR DISPLAYS: Positioned on both sides and integrated with a dedicated anti-scatter grid system to ensure outstanding diagnostic image quality.

FOOT PEDAL:
Enables compression control via compression paddle and includes a fast motor-driven compression release (unlock) function.

IMAGE ACQUISITION WORKSTATION

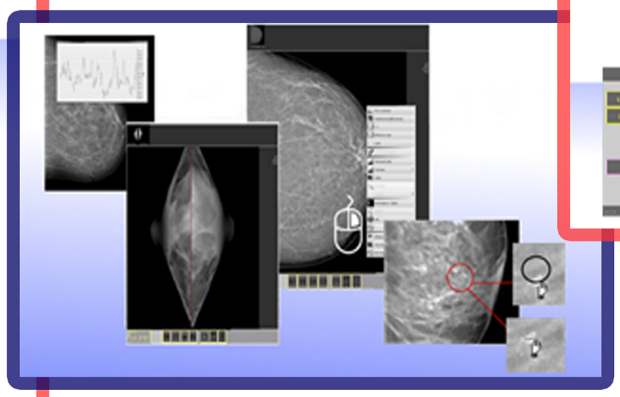

Radiographic Acquisition Workstation equipped with a transparent X-ray protective screen, enabling the operator to remain beside the patient during exposure while ensuring X-ray protection within the working area.

-0.34 mm Pb Anti-X Protective Barrier
-15" Color Control Panel Display
-7.4 kW Generator
-Motorized Isocentric C-Arm (Vertical)
-Special Protective Screens (Face-Out Design)
-Automatic Collimator
-Dual Integrated 7" TFT LED Touchscreen Color Displays
-PC with 2 HDDs: 1 TB Storage Capacity (up to 25,000 images) + 128 GB SSD (Operating System)
24" 2MP Monitor (Optional)
-Dual Multifunction Foot Pedals
-Phantom for Compression-Free Calibration

- 24" 2MP Color Monitor
- CD/DVD/USB, Speaker System
-Tungsten X-ray Tube 0.1/0.3
-Biangular Anode: 300 kHU
-Silicon or Selenium Digital Detector 24 × 30 cm
-2D removable anti-scatter grid (Poter-Bucky type)
-Compression paddles
-Dose calculator
-2 emergency stop buttons
-Integrated or X-ray shielded (optional) data acquisition workstation

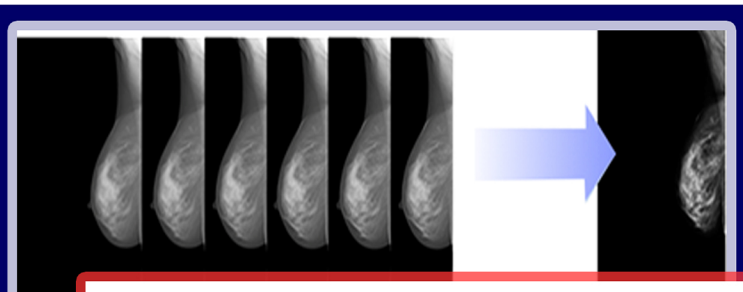

TOMOSYNTHESIS (OPTIONAL)

> Tomosynthesis capability at 3 different angles selectable by the user

> Ability to generate 3D tomosynthesis images from 2D images

> Optional 3D Biopsy capability

US X-RAY RÖNTGEN A.Ş. [AUTHORIZED DISTRIBUTOR]

D-100 Karayolu Cad. Yenicepınar Köyü
No:40 14240 Merkez/BOLU
(374) 243 92 00 / sale@usx-ray.com